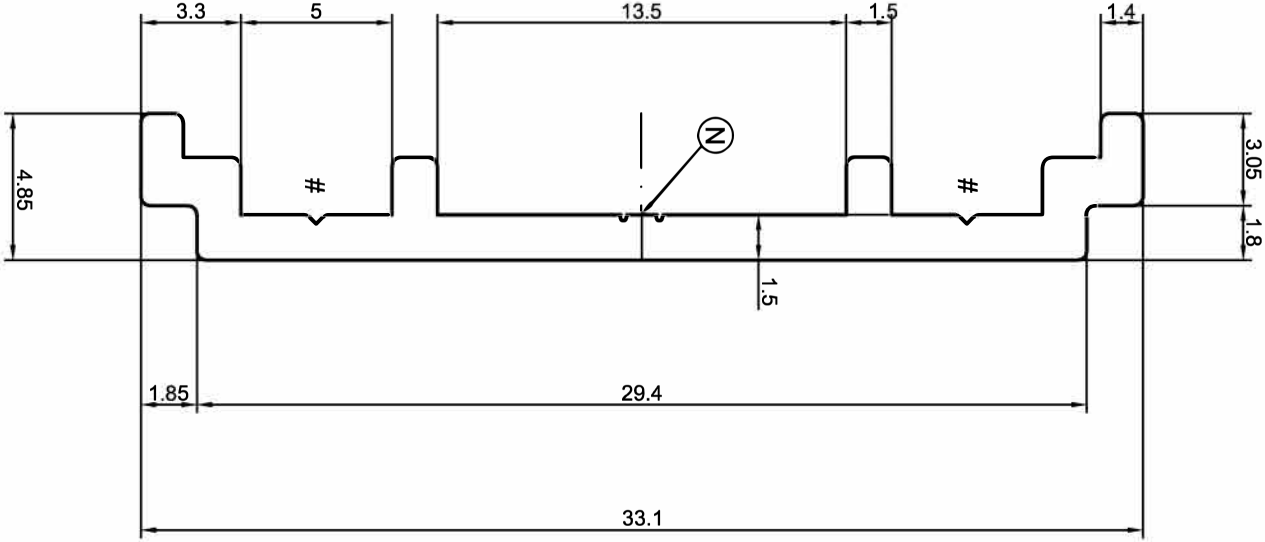
3.3
5
13.5
1.5
1.4
4.85
3.05
1.8
1.5
1.85
29.4
33.1
N
#
#